Technology and Beyond

HappyJapan

HFR-W SERIES

Flat-bed Wide Area Embroidery Machine

HappyJapan

Options

Partition Plate(one side)
-use as border frame-

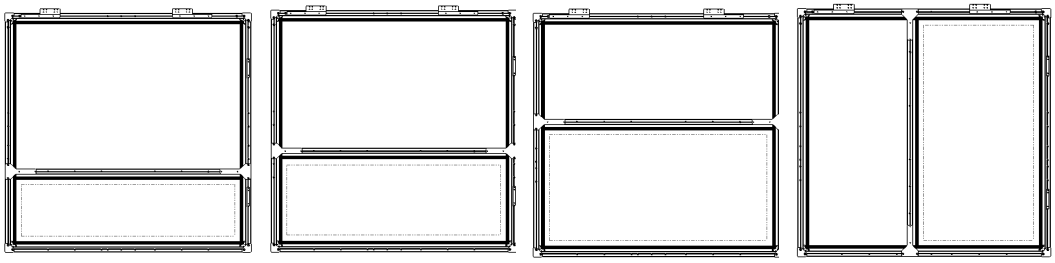

(300x1,200mm) (400x1,200mm) (600x1,200mm) (1,200 x 600mm)

Partition Plate(both side)
-use as border frame-

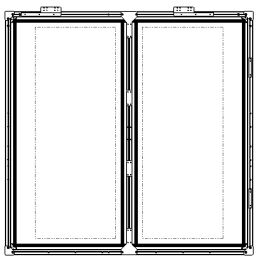

(1,200 x 524.5mm)

Partition Plate(one side)
-use for round frame-

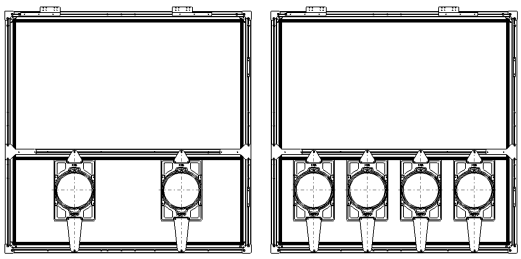

Other options

- 10.4inch Color LCD Touch Screen Control Panel
- Clip-Type Upper Thread Holder
- Bobbin Thread Winder
- Laser Position Marker
- Front Safety Sensor(Needle Sensor)
- Borer Device
- Sequin Device
- ZigZag Cording Device

HFR Series Specifications

Model	Head	Needles	Embroidery area(mm:YxX)		Max.Speed(r.p.m.)	
			Standard	Alternate	Standard	Alternate
HFR-W1502-120	2	15	600x1,200	—	1,200	—
HFR-W1502A-120	2	15	600x1,200	1,200x1,200	1,200	1,100

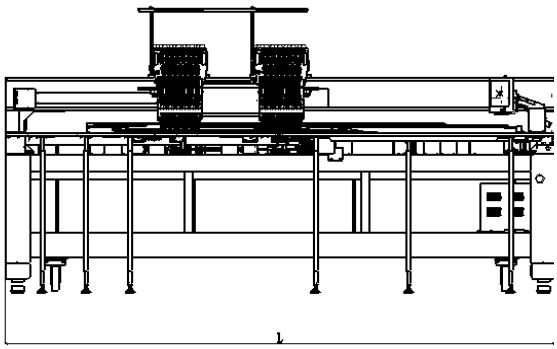

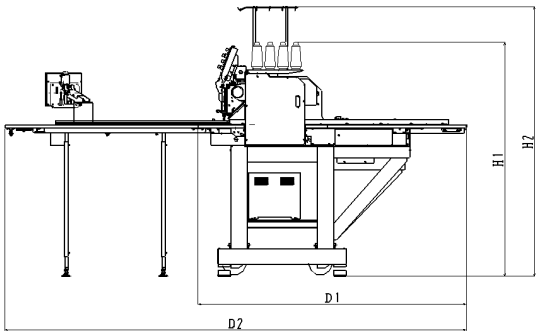

Machine size(mm)	
L (W1502)	2,660
L (W1502A)	3,265
D1	1,660
D2	2,850
H1	1,520
H2	1,750

●Embroidery area may be limited by hoops to be used. ●Specifications are subject to change without notice. ●Maximum speed may change by sewing conditions.

HappyJapan
HappyJapan Inc.
2-9-5 Taito, Taito-ku, Tokyo,
110-0016 JAPAN

Tel: +81-3-3834-0718
Fax:+81-3-3835-8917
E-mail:emb-info@happyjpn.com
http://www.happyjpn.com

Distributed by: